CAD generated and maintained drawing. All printed and electronic copies outside of PSG - Dover's engineering database are "Uncontrolled" and shall be used for reference only.

REV	DESCRIPTION
A	RELEASED INTO PRODUCTION SEE ECN #GRT000022

NOTES: UNLESS OTHERWISE SPECIFIED

1. DIMENSIONS AND TOLERANCES PER ASME Y14.5M-1994.
2. * INDICATES DIMENSIONS AND/OR FEATURES MODIFIED ON CURRENT REV LEVEL.

3. MINIMUM DIMENSION FOR REPACKING.

THIS DRAWING DOES NOT SHOW DETAILS OF ALL OPTIONS AND ACCESSORIES

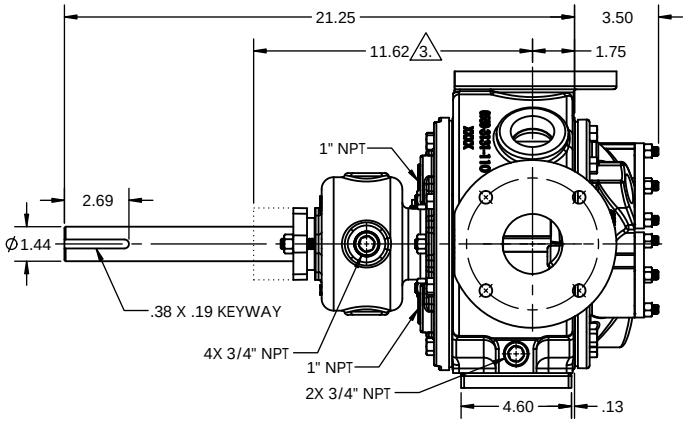

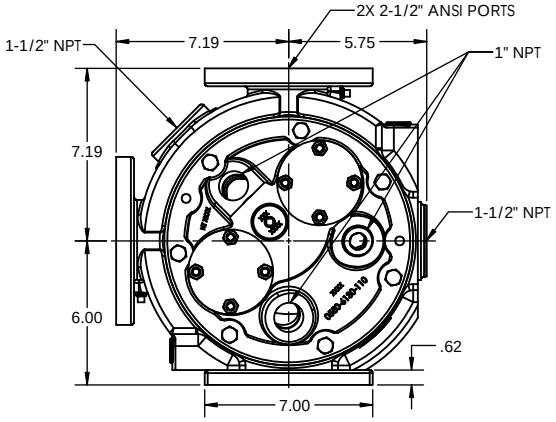

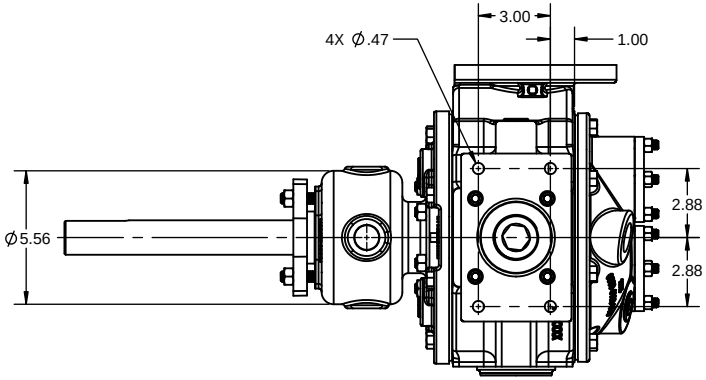

THIS DOCUMENT CONTAINS PROPRIETARY INFORMATION OF PSG - A DOVER COMPANY. ITS RECEIPT AND POSSESSION DO NOT CONVEY ANY RIGHTS TO REPRODUCE OR DISCLOSE ITS CONTENTS OR TO MANUFACTURE USE OR SELL ANYTHING IT MAY DESCRIBE. THIS DOCUMENT IS SUBJECT TO RETURN UPON REQUEST. REPRODUCTION, DISCLOSURE OR USE OF THIS DOCUMENT WITHOUT THE WRITTEN AUTHORIZATION OF DOVER CORPORATION IS STRICTLY FORBIDDEN.

THIRD ANGLE PROJECTION

DO NOT SCALE DRAWING
UNLESS OTHERWISE SPECIFIED
DIMENSIONS ARE IN INCHES
TOLERANCES ARE:

DECIMALS .XX	±	-
.XXX	±	-
ANGLES	±	-

DRAWN BY CJL	DATE 2017-12-19
APPROVED BY BKW	DATE 2018-01-22

ENVIROGEAR® PUMPS
22069 VAN BUREN STREET
GRAND TERRACE, CA 92313 USA
909 422-1731
WWW.ENVIROGEARPUMP.COM

TITLE
PUMP ASSEMBLY, DIMENSIONAL
V2-55, JACKETED HEAD, NO PRV

SIZE	DRAWING NO.	REV.
C	LM0061	A

SCALE 1:4 SHEET 1 OF 1