TYPE	SIZE	UNIT STYLE	DIMENSIONS 801-101	
SGL	1.25	PO	Section	801
	1.5		Effective	December 2000
			Replaces	June 1997

www.blackmer.com

RIGHT HAND ROTATION. FOR LEFT HAND ROTATION , SHAFT PROJECTION IS OPPOSITE THAT SHOWN.

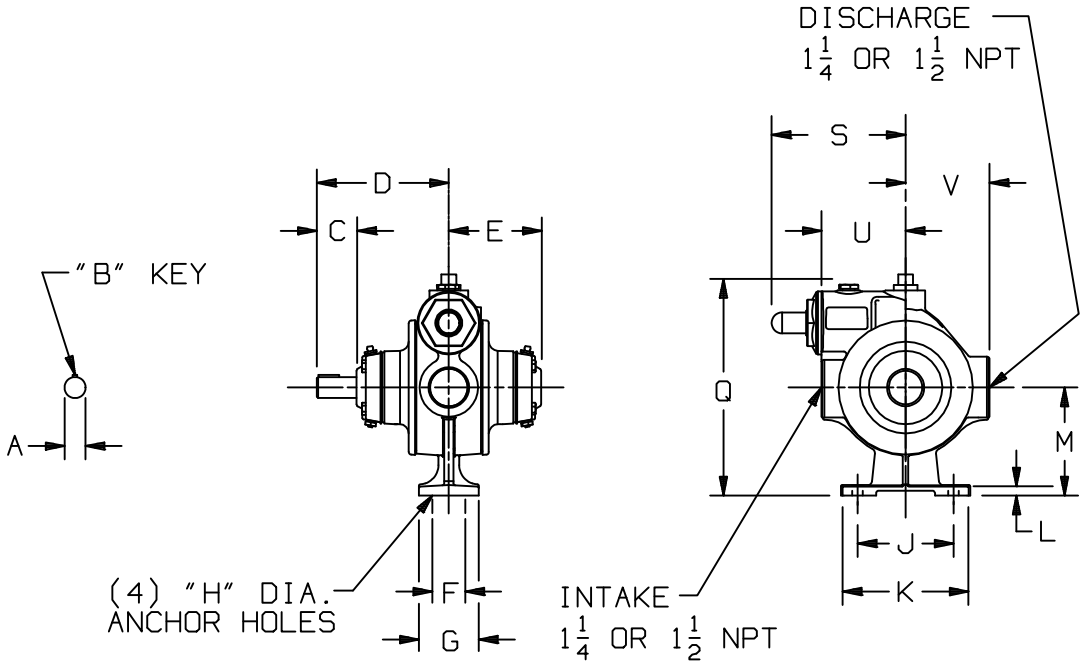

MOTOR			UNITS	DIMENSIONS									
FRAME SIZE				A	B	C	D	E	F	G	H	J	K
			IN	7/8	3/16	15/8	51/2	37/8	13/8	21/2	7/16	4	51/2
			MM	22,2	4,8	41,3	139,7	98,4	34,9	63,5	11,1	101,6	139,7
				L	M	N	P	Q	R	S	T	U	V
			IN	3/8	41/2	—	—	91/8	—	55/8	—	31/2	31/2
			MM	9,5	114,3	—	—	231,8	—	142,9	—	88,9	88,9
				W	X	Y	Z	AA	BB	CC	DD	EE	FF
			IN	—	—	—	—	—	—	—	—	—	—
			MM	—	—	—	—	—	—	—	—	—	—
				WEIGHT									
			LBS	29									
			KG	13.2									