Blackmer www.blackmer.com	TYPE	SIZE	UNIT STYLE	DIMENSIONS 106-107
	MLX, MRLX, MRLXW MLN, MRLN	4B	HRB	Section 106 Effective August 2005 Replaces November 1988

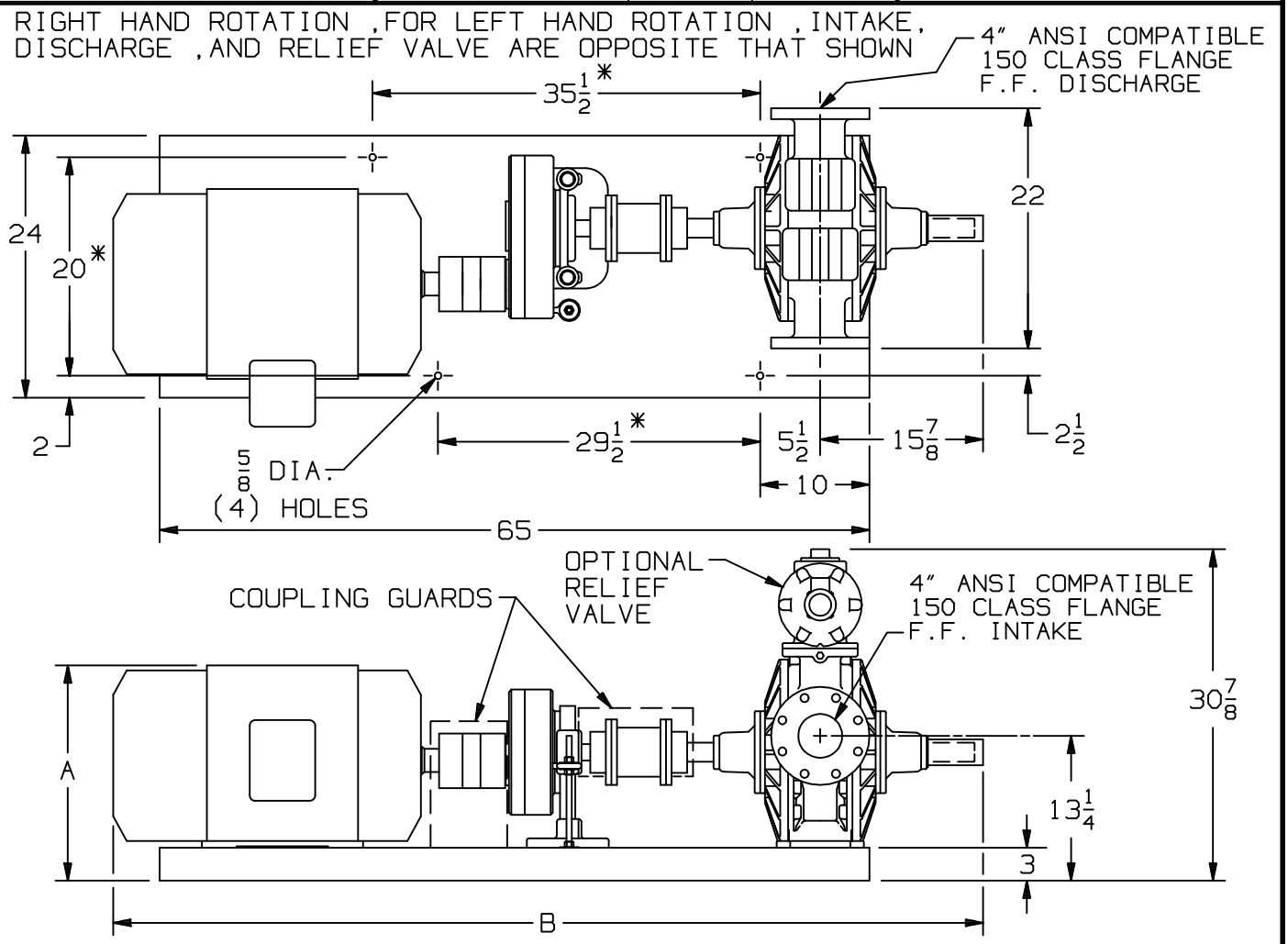

DIMENSIONS ARE IN INCHES "A" DIMENSION LESS EYEBOLT
* TOLERANCE ±1/8 , TOLERANCE ON OTHER DIMENSIONS ±1/4

MOTOR			BASE NO.	DIMENSIONS									
FRAME SIZE				A	B								
213T			901958	16 1/8	77 1/8								
215T			901958	16 1/8	77 1/8								
254T			901958	16 3/8	77 1/8								
256T			901958	16 3/8	77 1/8								
284T			901958	18	77 1/8								
286T			901958	18	77 3/8								
324T			901958	20	79 7/8								
326T			901958	20	81 5/8								
			WEIGHT LESS MOTOR										
			LBS	900									
			KG	408									

DIMENSIONS 106-107 p2 of 2	TYPE	SIZE	UNIT STYLE
Section 106 Effective August 2005 Replaces November 1988	MLX, MRLX, MRLXW MLN, MRLN	4B	HRB

Blackmer
www.blackmer.com

RIGHT HAND ROTATION ,FOR LEFT HAND ROTATION ,INTAKE, DISCHARGE ,AND RELIEF VALVE ARE OPPOSITE THAT SHOWN

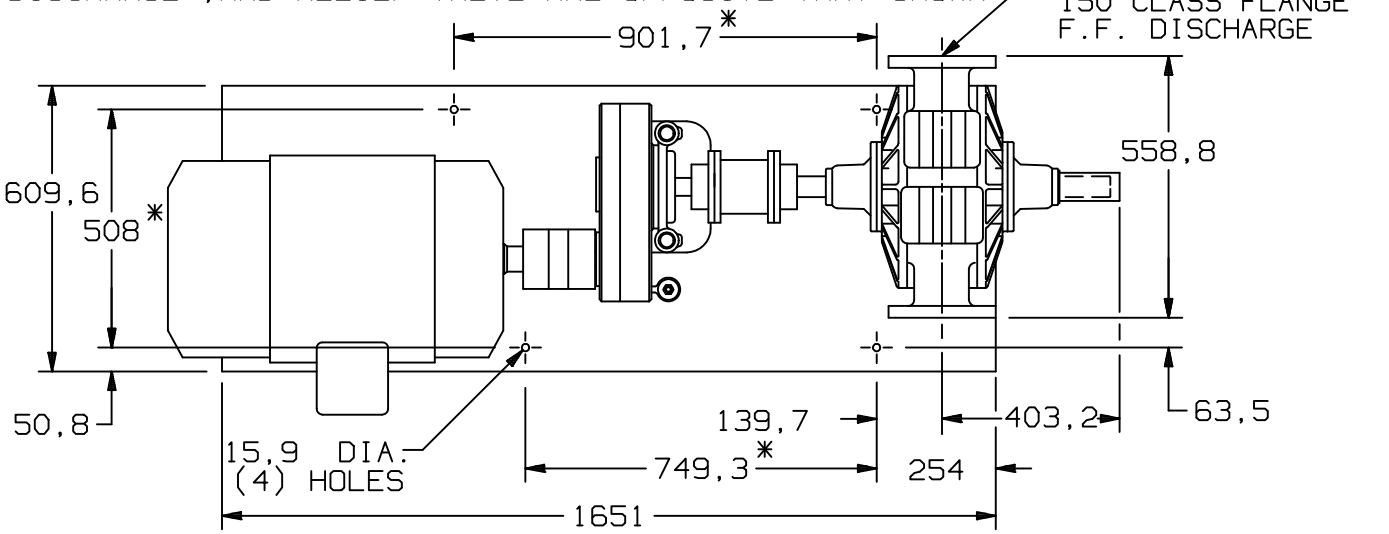

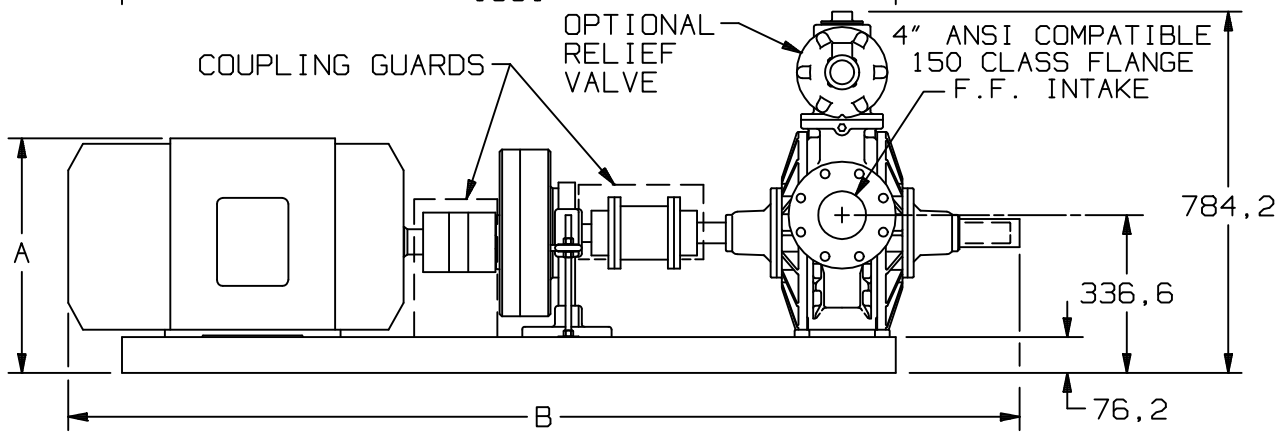

DIMENSIONS ARE IN MILLIMETERS ,"A" DIMENSION LESS EYEBOLT
* TOLERANCE ±3,18 ,TOLERANCE ON OTHER DIMENSIONS ±6,35

MOTOR			BASE NO.	DIMENSIONS									
FRAME SIZE				A	B								
213T			901958	409,6	1959								
215T			901958	409,6	1959								
254T			901958	415,9	1959								
256T			901958	415,9	1959								
284T			901958	457,2	1959								
286T			901958	457,2	1965,3								
324T			901958	508	2028,8								
326T			901958	508	2073,3								
			WEIGHT LESS MOTOR										
			LBS	900									
			KG	408									